Baghouse safety by design

While the cement industry's present focus is on decarbonisation and the use of coal is expected to decrease, the attention paid to the correct design of fire and explosion measures in coal grinding systems is expected to reach alarmingly low levels.

■ by **Vincent Grosskopf**, *Coal Mill Safety, Singapore*

The cement industry's indirect-firing fuel grinding systems are in need of protection against the hazards that stem from possible fires and dust explosions. A key factor is often the incorrect design or positioning of baghouses in terms of fire and explosion protection. Standards and directives such as EN 14491, NFPA 68 and ATEX Directives 1999/92/EC and 2014/34/EC) are not easy to comply with for all kinds of reasons. In spite of these regulations fire and explosion protection in coal grinding systems are rarely included correctly in the plant design.

Designers and suppliers of such systems have the responsibility to get their designs right. Where the in-house knowledge is insufficient, external assistance has to be sought.

Designing a safe coal grinding system

Correct protection against fire and explosions of a coal grinding system is based on three elements:

1. Safe operation

The conditions under which the system is operated should not exceed limits such as the temperature of the process air and the share of oxygen in the process air when the air is taken from a source intended to ensure a low oxygen content.

Other elements of safe operation include having adequate instrumentation in place and responding effectively when the instrumentation shows abnormal values.

However, safe operation starts in the raw coal yard, where it is necessary to prevent foreign parts and coal of which its natural continuous oxidation has intensified, from entering the grinding system.

2. Emergency measures

When adverse conditions, such as excessive high temperatures and carbon monoxide in the air, are present but not yet flaming fire, the application of emergency inerting is required to prevent the development of fire. The main aim of emergency inerting is to reduce the oxygen-in-air to below 13 per cent, the threshold at which explosive combustion can occur. Emergency inerting systems are not to be confused with fire extinguishing systems, which are not to be used. When CO or temperature monitoring shows the need, and emerging inerting is applied timely, no fire will develop and the affected process equipment can be safely run empty.

Figure 1: a very difficult to extinguish fire in a coal mill baghouse – once the explosion vents have released the explosion pressure, they should self-reclose to keep out oxygen and keep in the gaseous emerging inerting medium (carbon dioxide or nitrogen)

However, the use of CO_2 or N_2 to extinguish the fire would demand the reduction of O_2 to less than two per cent for many hours, which in reality is difficult to achieve. Therefore, emergency inerting systems should be used to prevent a fire from developing.

Furthermore, opening the baghouse for checks or the removal of burning coal is extremely dangerous, often leading to the loss of life or severe burns as the contact between burning material and the O_2 in ambient air can lead to a sudden flare-up of the combustion. Opening a system in which intensified oxidation takes place must be avoided at all costs.

3. Constructional explosion protection

This is the last line of defence as it needs to ensure protection after safe operation and emergency measures have failed.

Constructional explosion protection is protection against the effects of an explosion. What is often forgotten is that explosion protection should not be supportive to the fire(s) that are to be expected after an explosion with normally combustible material still available in the equipment.

Constructional explosion protection needs to ensure that:

- People will not be harmed as a result of its effects.
- The explosion pressure is mitigated to the extent that more than predefined minimal damage is prevented. In the systems discussed here, this normally requires explosion vents. Since explosion vents will never reduce the pressure to zero, a certain equipment strength is necessary.
- An explosion in one part of the system does not have the possibility to propagate or otherwise dangerously affect other parts of the system, which is why explosion isolation or explosion de-coupling has to be in place. Again, the necessary techniques demand a certain equipment strength.
- In cases where equipment is designed to withstand the full possible explosion pressure, its connections have adequate technology installed to stop the then stronger explosion effects from affecting connected equipment.

Figure 2: correct fire and explosion protection needs several features

1. Position of explosion decoupling ensuring that the to-be-expected explosion effects from upstream, which could affect the baghouse in ways that make its explosion protection impossible, are inhibited and that explosion effects initiated inside the baghouse do not harmfully propagate towards upstream equipment. This is normally achieved by installing an explosion diverter close to the baghouse inlet, which needs a self-reclosing venting mechanism (see Figure 3, left).
2. Explosion pressure shock resistance (EPSR) for the baghouse corresponding with the installed explosion venting capability. The EPSR needs to include the flange connection with the screw conveyor underneath, the screw conveyor proper, the tube sheet and its fixtures, penthouse and penthouse covers with their fixtures and all ductwork that can be affected by explosion pressure initiated inside the baghouse. The baghouse internally should not have surfaces on which a dust deposit could be formed.
3. Bracing struts reinforcing the baghouse's EPSR and inhibiting undesired lateral movement of the bags during operation and when exposed to explosion pressure.
4. Self-reclosing explosion vents with a venting capability that corresponds with the baghouse's EPSR.
5. Clearance between the outermost row of bags and the surface into which the explosion vents have been placed.
6. Explosion isolation to keep the baghouse bi-directionally isolated from the downstream process equipment.

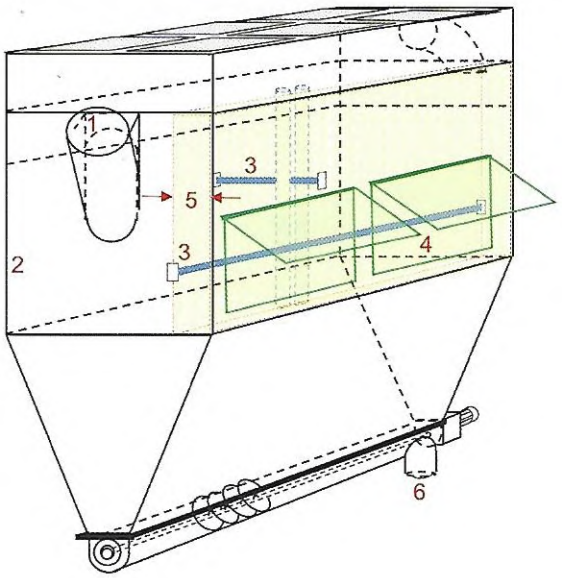

Figure 3: explosion decoupling at the baghouse inlet with an explosion diverter (left). If explosion diverters are incorrectly positioned (right) with the venting orifice too far away from the inlet in terms of length/diameter, accelerating flame front propagation through the long duct length between the baghouse and the diverter's venting office (or vice versa) may occur

Constructional explosion protection always comes with designs that provide for a degree of explosion pressure shock resistance (EPSR) and normally with explosion vents as well as explosion isolation or explosion de-coupling between connected enclosures. It prevents systems becoming hazardous when an explosion in them happens and that damage occurs to a higher than the pre-defined, very low degree.

Unfortunately, many of the coal mill baghouses in the cement industry have an EPSR that does not correspond with the installed explosion venting concept. And if the EPSR exists, it is often not correctly documented, if at all. To design an EPSR into a rectangular baghouse construction requires engineering knowledge.

This article will focus on constructional explosion protection, leaving preventative measures (ie, safe operation and emergency technology) outside its scope.

Correct constructional explosion protection for baghouses

While cylindrical baghouses can be found in the industry, the majority of baghouses consist of one or two rectangular boxes with one or more funnel hoppers under each of them. The several rectangular baghouse types used in the industry have in common that a large part of their construction is difficult to design with EPSR, ie, with the EPSR that is needed for a meaningful explosion venting concept.

The baghouse shown in Figure 1 is equipped with non-self-reclosing explosion vents, which results in inadequate fire and explosion protection. However, baghouse designers are well known to incorrectly choose non-self-closing explosion vents for various reasons, including:

- The applicable standards for explosion venting do not distinguish between self-reclosing and non-self-reclosing explosion vents, application-wise.
- Non-self-reclosing explosion vents are cheaper and easier to implement, which makes their use for low-EPSR explosion venting concepts with a great need for venting capability economically feasible.

Standards for explosion venting and standards for fire protection are not connected. Figure 2 shows the basics of constructional explosion protection and

Your new coal grinding system Full STOP●

To a specialist in the know, the GA drawing of your supplier's proposal is a clear forecast of possible incorrect fire and explosion protection.

Let **Coal Mill Safety Pte Ltd** comment on the proposed GA free of charge. You will be surprised!

Do this in the earliest project stage, before it is too late for corrections.

www.coalmillsafety.com
info@coalmillsafety.com

Coal Mill Safety also evaluates existing situations.

Figure 4: the penthouse covers are not meant to become explosion vents – they and their fixtures require the necessary EPSR

fire protection of coal mill baghouses. The ubiquitous facility for the injection of gaseous CO_2 or N_2 is not shown, nor are facilities for shutting off the baghouse inlet and outlet by means of a valve. Positioning and use of such valves are part of emergency inerting.

The design of baghouses with protection by means of explosion vents can follow, for example, the US-American standard NFPA 68 or the European EN standard 14491. In both cases, the rules emphasise the negative impacts of bags hindering the explosion venting on its path into the atmosphere. Following the NFPA standard without unblocking the venting path will lead to the need to install 25 per cent of additional venting capability. Following EN 14491 requires a venting path with a sufficiently unobstructed cross section and does not offer the possibility to use additional explosion vents to compensate for the obstruction. In both cases, this is shown by Item 5 in Figure 2.

However, only a few suppliers offer coal mill baghouses with an EPSR "good for" 0.4bar g (4t/m²), and with this strength good explosion venting concepts are possible. Other suppliers tend to use their standard baghouse designs and will find it difficult to respond to EPSR queries. In such cases, it may be possible to work on the basis of a reduced EPSR, eg 0.12bar g, which then results in higher costs to supply an adequate, much larger explosion venting solution.

Penthouses

The operation of a baghouse with one or more damaged bags can lead to an explosive atmosphere in the penthouse or to coal deposits that may have the potential to auto-ignite. Therefore, it is necessary to monitor the inclusion of leaked particles in the clean air exhaust. Without it, the conditions in the penthouse can become dangerous and difficult to clean.

Moreover, the penthouse covers must be considered part of the baghouse skin and, as a result, require the necessary EPSR (see Figure 4). Fixtures have to be strong and in place as the explosion pressure caused by an explosion in, for instance, a funnel hopper will be felt almost unmitigated in the penthouse.

Baghouses, with their explosion vents and penthouse covers, have many seals that could leak and through which false air may ingress. It is important that designs and maintenance prevent this from happening.

Bracing struts

Bracing struts not only limit the lateral movement of the bags, they also play an important role in the EPSR of the baghouse. Repair work in the baghouse has to treat this aspect with great care.

Self-reclosing vents with correct venting capability

Many explosion vents are incorrect in design – eg, they are too heavy to be effective, are kept closed by a retaining mechanism that results in unpredictable opening behaviour, have parts that may turn into missiles, etc. An expert will recognise such incorrect designs as they are ineffective and dangerous.

A correct supplier will ensure that the installed explosion vents are tested and certified for the relevant intended use, and that technical data such as effectiveness and activation behaviour are known and specified.

Unobstructed explosion venting path

Filter bags should not obstruct the path of explosion venting. The path of explosion venting needs to be unobstructed. Therefore, clearance between the outermost row of bags and the surface into which the explosion vents have been placed is important.

Figure 6 shows a possible installation of explosion vents that helps to achieve an unobstructed explosion venting path. With installations as shown in Figures 6 and 7, the direction of explosion venting into the

Figure 5: explosion vents consisting of a self-destructing venting element with hinged cover, all of it of incorrect and untested design. The very heavy cover over the venting element (middle), which itself already has an undefinable activation behaviour, makes these explosion vents ineffective and dangerous

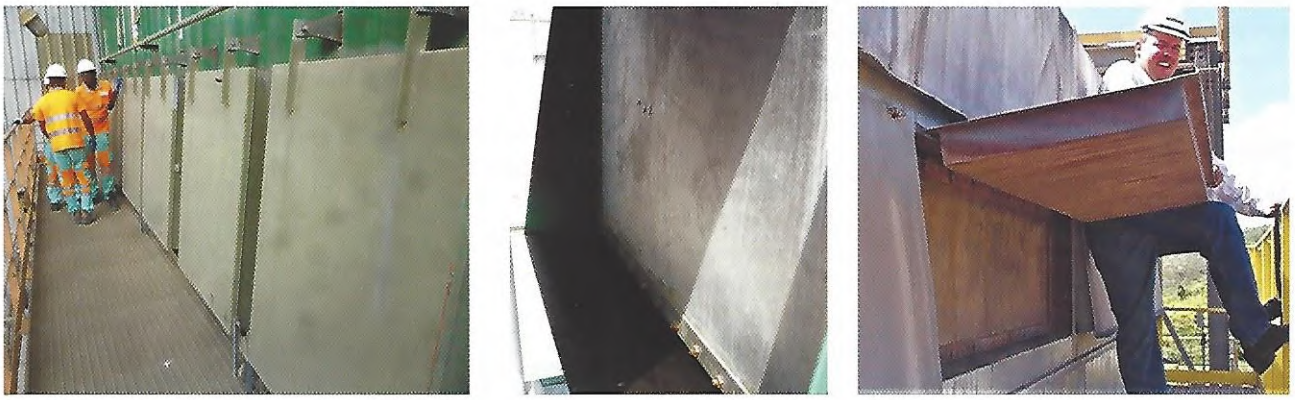

Figure 6: possible installation of explosion vents to support an unobstructed explosion venting path

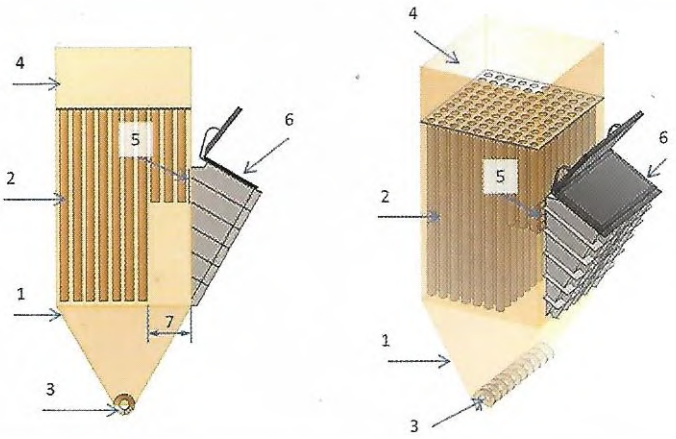

1. Funnel hopper
2. Filter bags on cages
3. Extraction screw conveyor
4. Penthouse
5. Mezzanine
6. Self-reclosing explosion vent
7. Unobstructed air passage path for explosion venting, here by means of a section with shortened bags.

atmosphere is upwards, which is safer.

In addition, explosion venting always leads to a recoil (reaction) force in the opposite direction of the venting blast. Many filter installations with lateral explosion vents do not have adequate support for such lateral recoil forces and additional damage may be the result.

Rotary valves as explosion isolation systems

There is a belief in the industry that rotary valves will prevent the transgression of explosion effects (flames, pressure) from one enclosure to another. Unless the rotary valve has a column of material above it, this is not true.

Special rotary valves that qualify as explosion isolation systems exist, and some of these can even be found in coal grinding systems. However, their qualification as explosion isolation systems is quickly lost. Their qualification depends on an extremely narrow gap between the tips of their rotor vanes and the bore of their body. The wear to which the rotor vanes are exposed makes it impossible in practice to sustain the explosion isolating capability.

In Figure 8 a double rotary valve configuration under each funnel hopper is shown. While this is better than a single rotary valve, it is not a professional solution. Other methods are available and should be chosen.

The connection between coal mill

GEOSCAN-C
BLENDSCAN

ON-BELT ELEMENTAL ANALYSER AND BLENDING SOFTWARE FOR CEMENT

On-line Real Time Analysis for the Cement Industry

Contact us for advice and assistance:

Tel: +61 7 3710 8400
Fax: +61 7 3710 8499
Web site: www.scantech.com.au
Email: geoscan@scantech.com.au

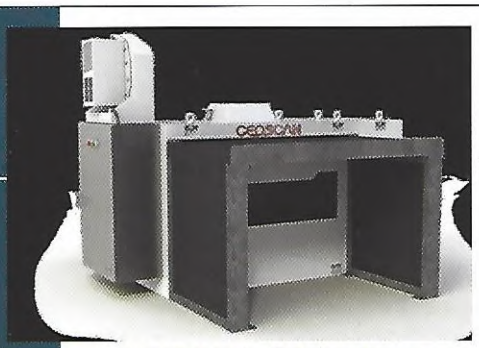

SCANTECH
PROCESS CONTROL SPECIALISTS

GEOSCAN –C Advantages

- No Contact with the Belt
- High Performance Detectors
- Multi-Detectors Configuration
- Easy Calibration
- 2 Years Warranty

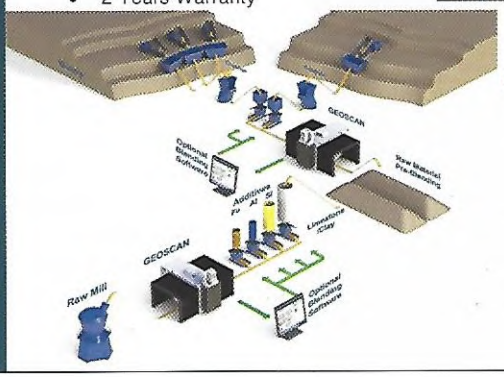

BLENDSCAN Advantages

- Minimises variations in product quality
- Increased production
- Increased profits
- Configuration flexibility
- Reliable HMI based on Siemens WinCC

Figure 7: correct explosion venting configuration

Figure 8: the more funnel hoppers to discharge from, the more explosion isolation is needed

baghouses and downstream equipment is normally the drop connection either with the pre-hopper of a pump (pneumatic conveying to pulverised fuel (PF) silos) or with a screw conveyor that conveys the ground coal to the PF silos.

The explosion pressure in a pump pre-hopper or in a PF silo must be expected to be considerably higher than whatever could be allowed for a rectangular baghouse design and the effects of an explosion in such equipment (flames, pressure) cannot be allowed to transgress into the baghouse. Effective explosion isolation has to be installed. Transgression in both directions, into the baghouse from below, or out of the baghouse towards pump pre-hopper(s) or PF silo(s), has to be made impossible.

When a screw conveyor for PF, especially a U-through screw conveyor, is exposed to explosion pressure internally, its covers will come off and a dust cloud may be formed in its environment. Should this dust cloud be ignited, a large flame body will be formed. If people are killed by industrial explosions, it is mostly the result of such an equipment-external secondary explosion.

Where to install a coal mill baghouse in the grinding system?

Explosion venting has to be safely channelled outside the coal mill baghouse. Therefore, to install a coal mill baghouse inside a semi-closed structure is not a good idea. Moreover, if the venting path is obstructed the system becomes even more unsafe. In some cases, the explosion venting may blow cladding from the building with potentially grave consequences for plant personnel.

These badly-chosen locations require a channel to lead the explosion venting blast into the atmosphere. Such channels require the EPSR and venting capability of the explosion venting concept to be increased in line with the applicable explosion venting standards. However, these channels will often lead to issues in terms of maintenance access.

Figure 9: without understanding explosion venting, no repair work on explosion vents can be carried out without a risk that the repair will negatively affect their functionality, as shown by the welding job in this image

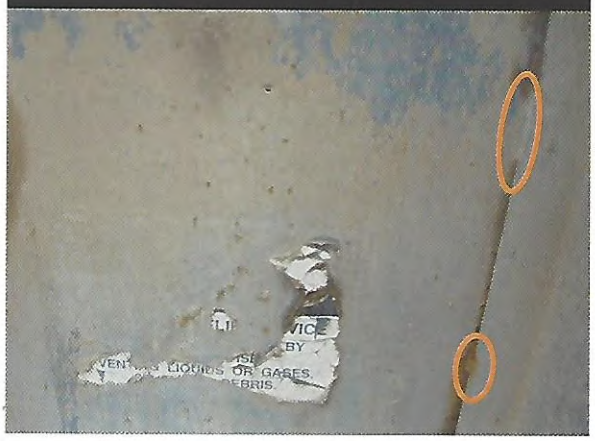

In addition, explosion protection experts know that in complex structures an initial explosion with its initial flame velocity of roughly 10m/s may spread.

Depending on the path(s) of the flame spreading, the flame velocity and its pressure effects will increase.

For multi-funnel-hopper baghouses these complex self-re-enforcing explosion effects have never been studied and are unknown. This means that multi-funnel-hopper baghouses should not be used for dust explosion hazardous applications, since the real explosion venting capability requirement cannot be calculated with the equations provided by the standards for explosion venting. For twin chamber baghouses with a continuous funnel hopper under each of the chambers the situation is slightly better but remains not comprehensively covered by the standards for explosion venting. In addition, using the main coal grinding baghouse for dedusting purposes that requires connection with other equipment is not acceptable. The rules for constructional explosion protection require explosion isolation, or at least explosion de-coupling, for such connections. This would come with additional maintenance requirements and there are also other implications, since the connections would make emergency inerting more complicated.

The last example of explosion and fire protection-related wrongs that will be found in coal grinding systems at cement plants, regardless of the name and size of their group, is shown in Figure 9. A false air problem may have been solved, but the explosion vent will no longer contribute to the explosion venting as it should, if it had to. The explosion vent should have been replaced.

Conclusion

Unfortunately, the unawareness of those responsible for ensuring the operational safety of coal grinding systems, and their priority to produce cement with the equipment available, makes it impossible for them to address the above issues. Therefore, the use of external expertise can be helpful in improving the safe design and operation of baghouses in coal grinding systems. ■